We put space to work.

Item # _____

Job _____

# Seismic Shelving

## HCAI (OSHPD) Preapproval

### Components for Super Erecta® and MetroMax®

Metro shelving systems configured using specially designed seismic posts, base plates, and post clamps have earned a HCAI (The Department of Healthcare Access and Information) [formerly OSHPD (Office of Statewide Health Planning and Development)] Preapproval for new construction in the state of California subject to the 2019 California Building Code.

**Reference: OPM-0426**

These seismic shelving components may also be used to obtain site specific approvals.



**Metro Super Erecta®**
*Stand-alone unit*



**MetroMax® i**
Stand-alone unit

- **Shelving styles subject to this preapproval:**
  Wire Shelving: Super Erecta wire & solid, Super Adjustable Super Erecta
  Polymer Mat shelving: MetroMax i, MetroMax Q
  - *Stand-alone units, end-to-end configurations, and back-to-back / end-to-end configurations available. Back-to-back / end-to-end runs are ideal for creating dense storage within the center of a room.*
- **Easy to Install and Adjust:** Patented leveler bolt eliminates the need to drill posts in the field. The post mounts directly to the base plate. Levelers also can be adjusted before final installation of the clevis pins to level the units more quickly than conventional seismic options. The base plates are ultimately anchored to the floor. (Note: anchor bolts are not provided).
- **Maximum use of space:** Base plate designs minimize the gap between adjacent units to create more usable storage space.
- **Base plates:** Accommodate both Super Erecta and MetroMax shelving styles.
  - *Base plate unique shapes tuck under the shelving to keep aisles open and to minimize potential trip hazards.*
  - *Low profile design is easier to keep clean.*
  - *Hole locations on the plates allow installers flexibility to work around rebar.*
  - *Four options*
    - > 1-post, 2-3 bolt triangular plate kit
    - > 1-post, 4-bolt, square plate kit for higher stories and worst seismic zones.
    - > 2-post, 5-bolt rectangular plate kit for end-to-end configurations and back-to-back configurations
    - > 4-post, 6-bolt plate, square bolt kit for back-to-back configurations.
- **Seismic Posts:** Patented Metro Seismic leveler is mounted to a post with a welded insert to offer up to 1" (25mm) adjustment while meeting the uplift requirements of the HCAI (OSHPD) Preapproval.
- **Post Clamps:** Super Erecta and MetroMax versions available to satisfy the HCAI (OSHPD) Preapproval requirements.
- **Strong and reliable:** Proven Metro shelving designs and proprietary seismic accessories satisfy rigorous seismic applications.

*All Metro Catalog Sheets are available on our website:* **www.metro.com**

**InterMetro Industries Corporation**
North Washington Street, Wilkes-Barre, PA 18705
Product Information. U.S. and Canada: 1.800.992.1776
Outside U.S. and Canada: www.metro.com/contactus

L02-235 Printed in U.S.A. 6/24

Information and specifications are subject to change without notice. Please confirm at time of order.

Copyright © 2024 InterMetro Industries Corp.

## HCAI (OSHPD) Preapproval
# Base Plate Kits

| Description | Approx Pkg. Wt. (lbs.) | (kg) | Cat. No. |
|---|---|---|---|
| Seismic OSHPD Preapproval 1-post, 2-3 bolt triangular plate kit | 9.8 | 4.4 | **SABP13BR-4PK** |
| Seismic OSHPD Preapproval 1-post, 4-bolt square plate kit | 12.5 | 5.7 | **SABP14BR-4PK** |
| Seismic OSHPD Preapproval 2-post, 5- bolt rectangular plate kit | 10.8 | 4.9 | **SABP25BR-2PK** |
| Seismic OSHPD Preapproval 4-post, 6 bolt square plate kit | 8.4 | 3.8 | **SABP46BR-1PK** |

**SABP13BR-4PK**

### 1-post, 2-3 bolt triangular plate kit includes:

- (4) chromate-plated base plates, each with a single post socket
- (1) bag of four clevis pins and four cotter pins
- (4) hole covers
- (2) seismic labels
- (2) SES label holders.

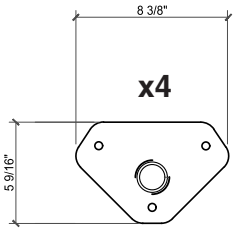


**SABP14BR-4PK**

### 1-post, 4-bolt, square plate kit includes:

- (4) chromate-plated base plates, each with a single post socket
- (1) bag of four clevis pins and four cotter pins
- (2) seismic labels
- (2) SES label holders.

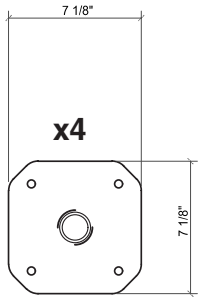


**SABP25BR-2PK**

### 2-post, 5 bolt rectangular plate kit includes:

- (2) chromate-plated base plates, each with two post sockets
- (1) bag of four clevis pins and four cotter pins
- (2) seismic labels
- (2) SES label holders.

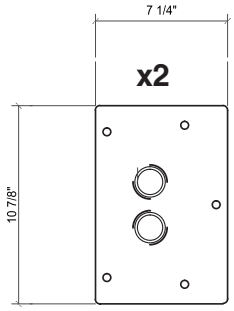


**SABP46BR-1PK**

### 4-post, 6-bolt plate, square bolt kit includes:

- (1) chromate plated base plate with 4 post sockets
- (1) bag of four clevis pins and four cotter pins
- (2) seismic labels
- (2) SES label holders.

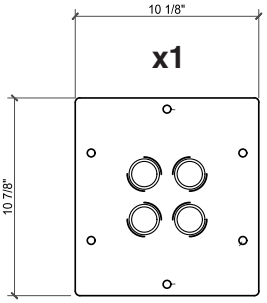


## HCAI (OSHPD) Preapproval
# Posts and Post Clamps

**Super Erecta Post:** Chrome plated, 1" (25mm) diameter posts with a welded insert and seismic leveler bolt.

**MetroMax Post:** Steel post with a welded insert and a seismic leveler bolt. Epoxy coated finish with Microban antimicrobial product protection over a chromate substrate. Seismic bolt is chromate-plated steel.

**Post Clamps:** Stainless steel. There are versions for Super Erecta posts and MetroMax posts.

**Seismic Leveler Bolt:** Chromate-plated steel.



**Super Erecta Post**



**MetroMax Post**

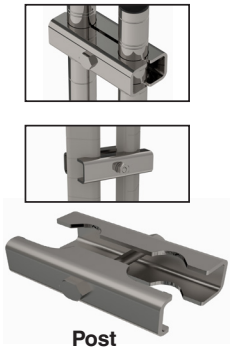

**Post Clamp**

## Super Erecta® and Super Adjustable Super Erecta®

| Cat. No. | Description | Nominal Height (in.) | (mm) | Actual Height (in.) | (mm) | Actual width (in.) | (mm) | Approx Pkd. Weight (lbs.) | (kg) |
|---|---|---|---|---|---|---|---|---|---|
| **SA63P** | Seismic OSHPD Preapproval 63" Chrome Plated Post | 63 | 1600 | 63.6250 | 1616 | 1 | 25 | 4.0 | 1.8 |
| **SA74P** | Seismic OSHPD Preapproval 74" Chrome Plated Post | 74 | 1880 | 75.6875 | 1922 | 1 | 25 | 4.8 | 2.2 |
| **SA86P** | Seismic 86" Chrome Plated Post | 86 | 2185 | 87.6875 | 2227 | 1 | 25 | 5.5 | 2.5 |
| **SAPCLAMP** | Seismic OSHPD Preapproval Stainless Steel Post Clamp for Super Erecta | | | 1.1250 | 29 | | | 0.7 | 0.3 |

NOTE: 86" posts (SA86P) can be used to earn site specific approvals.

## MetroMax® i and MetroMax® Q

| Cat. No. | Description | Nominal Height (in.) | (mm) | Actual Height (in.) | (mm) | Actual width (in.) | (mm) | Approx Pkd. Weight (lbs.) | (kg) |
|---|---|---|---|---|---|---|---|---|---|
| **SAMQ63PE** | Seismic OSHPD Preapproval MetroMax 63" Post | 63 | 1600 | 62.625 | 1591 | 1.5 | 38 | 4.4 | 2.0 |
| **SAMQ74PE** | Seismic OSHPD Preapproval MetroMax 74" Post | 74 | 1880 | 74.625 | 1895 | 1.5 | 38 | 4.9 | 2.2 |
| **SAMQ86PE** | Seismic MetroMax 86' Post | 86 | 2185 | 86.625 | 2200 | 1.5 | 38 | 5.7 | 2.6 |
| **SAPCLAMPX** | Seismic OSHPD Pre-approved Stainless Steel Post Clamp for MetroMax | | | 1.1250 | 29 | | | 0.6 | 0.3 |

NOTE: 86" posts (SAMQ86PE) can be used to earn site specific approvals.

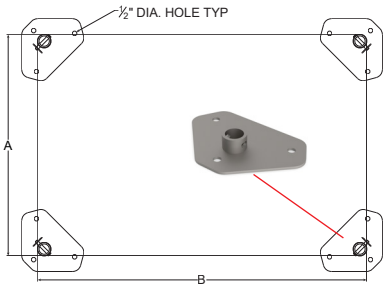




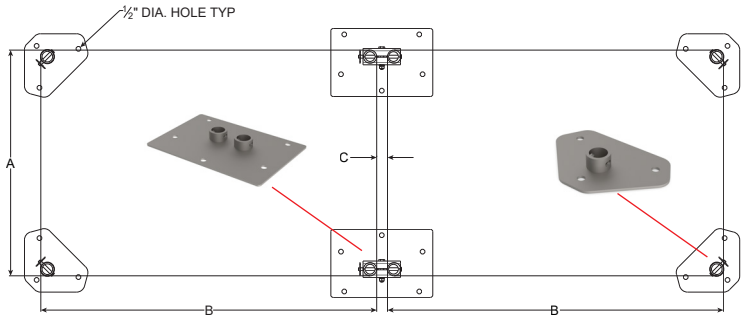




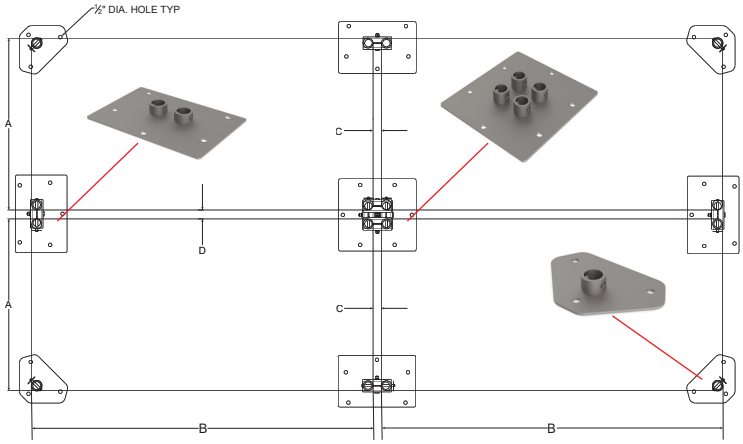




## Super Erecta® and Super Adjustable Super Erecta® Installations.

| Dimensions | Super Erecta / Super Adjustable |
|---|---|
| A | 18", 21", 24" (457, 530, 620mm) |
| B | 23-3/4" thru 71-3/4" (603 - 1822mm) |
| C | 1-5/32" (29mm) |
| D | 1-5/32" (29mm) |

## MetroMax® Q Installations.

| Dimensions | MetroMax Q |
|---|---|
| A | 18", 21", 24" (457, 530, 620mm) |
| B | 23-1/2" thru 71-1/2" (597 - 1816mm) |
| C | 1-7/32" (31mm) |
| D | 1-1/4" (32mm) |

## MetroMax® I Installations.

| Dimensions | MetroMax i |
|---|---|
| A | 18", 24" (457, 620mm) |
| B | 23-9/16" thru 71-9/16" (598 - 1816mm) |
| C | 1-5/32" (29mm) |
| D | 1-1/4" (32mm) |

Job _____

# Seismic Shelving

## Components for Super Erecta® and MetroMax®

METRO®
We put space to work.

HCAI (OSHPD) Preapproval OPM-0426 specifically outlines the configuration requirements for OSHPD governed healthcare facilities in the state of California subject to the 2019 California Building Codes.
(note: These requirements may vary in different jurisdictions.)

**The HCAI Preapproval outlines the following:**
**Weight Loads (for installations subject to HCAI Preapproval)**
20 psf per tier for a shelving unit. The maximum load bearing of a shelving unit is defined as a five tier unit with four storage tiers and an open top shelf (no load).

Example 1: 24x48x74, 4-tier unit. Maximum load bearing per shelf is 20lbs. x 8 sq ft = 160lbs. The total unit is rated using this formula: 4 tiers x 160lbs. per tier = 640lbs.

Example 2: 24x48x74, 6-tier unit. Maximum load bearing per 24x48 unit is 640lbs. A 6-tier unit is defined to have 5 storage tiers. and an open top shelf. 640lbs. / 5 tiers = 128lbs. per tier.

**Positioning of bottom shelf:** maximum of 10" (254mm) from the floor.

**Seismic Zones are called out within OPM-0426.**

## Replacement Parts

- **Seismic Leveler Bolt:** designed for use with Metro seismic posts with welded inserts. **Cat. No. RPSABOLT**
- **Clevis and Cotter Pin Kit:** contains four clevis pins and four cotter pins. **Cat. No. RPHDWE-CLEVPIN4**
- **Super Erecta Label Holders: 9990P**, for wire shelves.
  NOTE: Seismic labels are applied directly to the shelf beams on MetroMax i shelves or the open grid mats on MetroMax Q .
- **Anchorage Bolts:** Metro does not provide the concrete floor anchorage bolts. The engineer of record for a site specific job must verify that the building structure is adequate for the applied load.

**Supporting Information can be found on Metro.com**
- HCAI (OSHPD) Preapproval Document OPM-0426.
  OPM stands for OSHPD Preapproval of Manufacturer's Certification.
- Calculations: Please contact your Metro representative.